Florin 15

Florin wall mounted bath mixer and shower attachment

The Florin Collection brings together modern, rounded forms with the linear shapes synonymous with Art Deco design. Made in England using traditional techniques.

- 0.5bar minimum

Polished chrome (shown)

Wandmontierte Wannenarmatur mit Handbrause

Die Florin Kollektion verbindet moderne, runde Formen mit geraden Linien im Art Deco Design. Made in England unter Verwendung traditioneller Techniken.

- Mindestdruck 0,5bar

Chrom poliert (abgebildet)

Mélangeur bain mural avec douchette

La collection Florin allie formes modernes et arrondies et silhouette linéaire, typique du design Art Déco. Fabriquée en Angleterre à l'aide de techniques traditionnelles.

- Minimum 0,5 bar

Chromé (voir photo)

Mezclador baño - ducha con teleducha

La Colección Florin une las formas modernas y redondas con las líneas propias del diseño art déco. Fabricada en Inglaterra a partir de técnicas tradicionales.

- Mínimo 0,5 bar

Cromado brillante (ver foto)

Miscelatore da vasca con attacco doccetta, montato a parete

La collezione Florin accoppua curve moderne e rotonde con le forme lineari sinonimo di design Art Deco. Prodotto in Inghilterra utilizzando forme tradizionali.

- Mínimo 0,5 bar

Cromo metallico lucidato (mostrato)

FLO-15-PC Polished chrome, Chrom poliert, Chromé, Cromado brillante, Cromo metallico lucidato

FLO-15-PN Polished nickel, Nickel poliert, Nickel brillant, Níquel brillante, nickel lucidato

5 years

Massachusetts Code: File No. Pending
cUPC listing (ASME & CSA) by IAPMO: File No. 8086
Lead Free listing (Safe Drinking Water Act & California Health & Safety Code) by IAPMO: File No. Pending
Drinking Water Listing (NSF 61) by IAPMO: File No. Pending

Florin 15 FLO-15-**

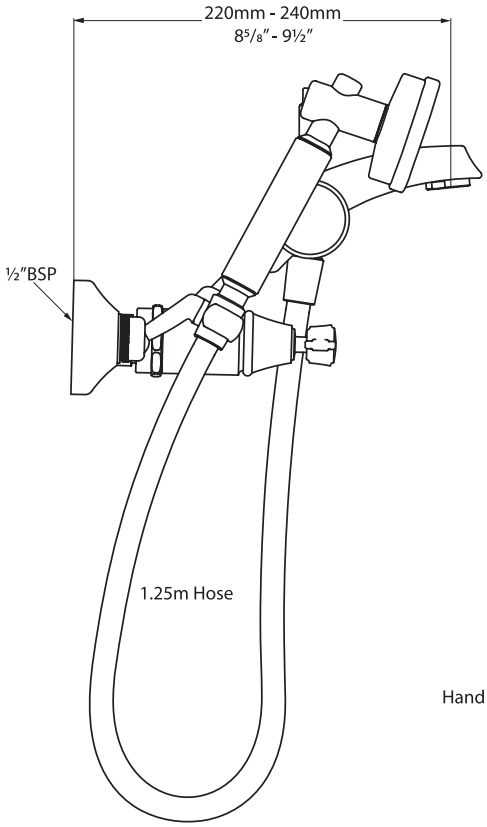

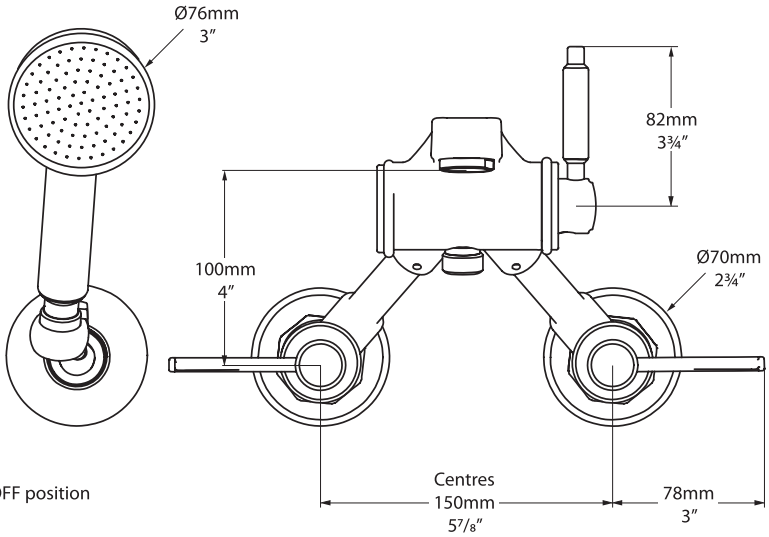

Handles Shown in OFF position

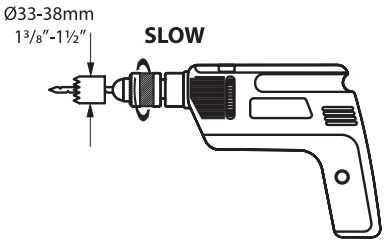

Florin 15

UK 0.5bar minimum, 1.0bar recommended
DE 0.5bar Minimum 1.0bar empfohlen
FR Minimum 0,5 bar, 1,0 bar recommandée
ES Mínimo 0,5 bar, 1.0bar recomendado
IT Minimo di 0,5 bar, 1.0bar raccomandata

***All measurements subject to +/-5% tolerance**

Pressure (bar)	0.5	1.0	1.5	2.0	3.0	4.0	5.0
Flow (lpm)*	13	19	23	26	32	37	41

*Through Bath Filler

.dwg | .dxf | .skp www.vandabaths.com

Massachusetts Code: File No. Pending
cUPC listing (ASME & CSA) by IAPMO: File No. 8086
Lead Free listing (Safe Drinking Water Act & California Health & Safety Code) by IAPMO: File No. Pending
Drinking Water Listing (NSF 61) by IAPMO: File No. Pending